Installation Drag.

- Isolated or Podded airbreathing engine

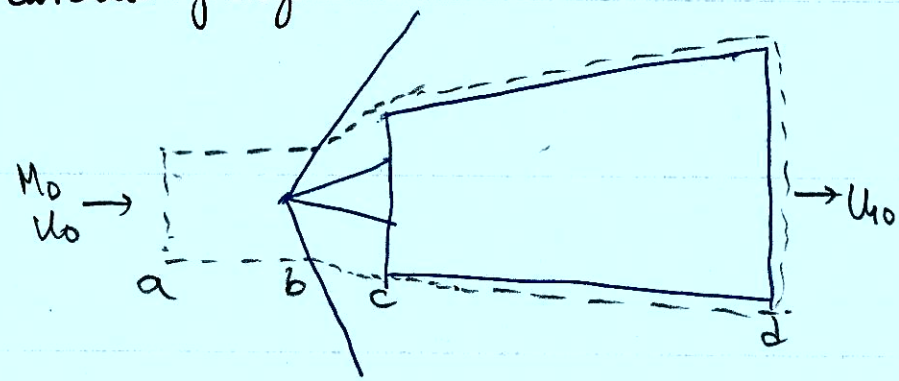

Uninst. $\quad F = \dot{m}_{10} u_{10} - \dot{m}_0 u_{10} + (p_{10} - p_0) A_{10}$

Inst thrust $T = \dot{m}_{10} u_{10} - \dot{m}_0 u_0 + (p_{10} - p_0) A_0 + \underbrace{\int_b^c (p - p_0) \cdot dA_x}_{} + \underbrace{\int_c^d (p - p_0) \cdot dA_x}_{} - F_{fric,x}$

$$D_{ext} = -\int_c^d (p - p_0)\, dA_x \quad : \text{External drag.}$$

$$D_{add} = -\int_b^c (p - p_0)\, dA_x \quad : \text{Additive drag.}$$

$$T = F - (D_{add} + D_{ext})$$

© North Carolina State University, All Rights Reserved

Installed thrust:

Recall $\tau \equiv$ uninstalled thrust

$\hat{\tau} \equiv$ installed thrust

$$\hat{\tau} = \tau - \text{Installation losses.}$$

$\hat{\tau} \equiv$ what we are interested in

Can lump installation losses into 2 terms : 1st → additive drag, D_{add} due to operation @ off-design flight cond^{n}s

2nd, External Drag : this is due to Δp acting on the surface that is not parallel to flight vector.

Viscous forces are lumped as a different skin Friction force term

For an integrated airbreathing engine

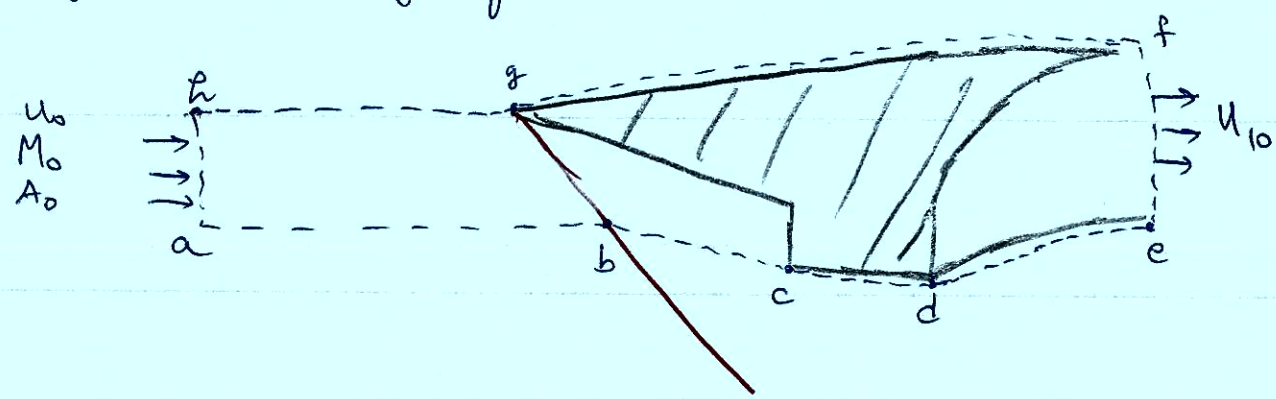

© North Carolina State University, All Rights Reserved

$$\hat{\tau} = \dot{m}_{10} u_{10} - \dot{m}_0 u_0 + \int_b^c (p-p_0)\, dA_x + \int_c^d (p-p_0)\, dA_x + \int_d^e (p-p_0)\, dA_x$$

$$+ \underbrace{\int_e^f (p-p_0)\, dA_x}_{} + \int_f^g (p-p_0)\, dA_x - F_{fx}$$

$$\tau = \dot{m}_{10} u_{10} - \dot{m}_{10} u_{10} + (p_{10} - p_0) A_{10}$$

$$D_{add} = -\int_b^c (p-p_0)\, dA_x - \int_d^e (p-p_0)\, dA_x$$

$$D_{ext} = -\int_c^d (p-p_0)\, dA_x - \int_f^g (p-p_0)\, dA_x .$$

Define $C_D = \dfrac{D}{q_0 A_x} = \dfrac{2}{\gamma_0 M_0^2}\left(\dfrac{p}{p_0} - 1\right)$

$$\boxed{\frac{\hat{\tau}}{\dot{m} V_0} = \frac{\tau}{\dot{m} V_0} - \frac{(C_D A_x)_{add}}{2 A_0} - \frac{(C_D A_x)_{ext}}{2 A_0}}$$

© North Carolina State University, All Rights Reserved

- Integrated Airbreathing Engine

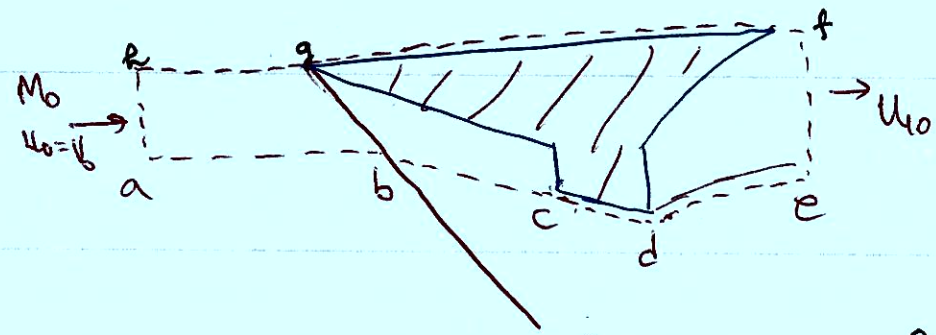

$$\hat{\tau} = T = \dot{m}_{10} u_{10} - \dot{m}_0 u_0 + \int_b^c (p - p_0) \cdot dA_x + \int_c^d (p - p_0) \cdot dA_x + \int_d^e (p - p_0)\, dA_x + \int_e^f (p - p_0)\, dA$$

$$+ \int_f^g (p - p_0)\, dA_x - F_{fx}$$

$$\tau = F = \dot{m}_{10} \cdot u_{10} - \dot{m}_0 u_0 + (p_{10} - p_0) A_{10}$$

$$D_{add} = -\int_b^c (p - p_0)\, dA_x - \int_d^e (p - p_0)\, dA_x$$

$$D_{ext} = -\int_c^d (p - p_0)\, dA_x - \int_f^g (p - p_0)\, dA_x$$

Define $C_D = \dfrac{D}{q_0 A_x} = \dfrac{2}{\gamma_0 M_0^2}\left(\dfrac{p}{p_0} - 1\right)$

$$\boxed{\frac{\hat{\tau}}{\dot{m} V_0} = \frac{\tau}{\dot{m} V_0} - \frac{(C_D A_x)_{add}}{2 A_0} - \frac{(C_D A_x)_{ext}}{2 A_0}}$$

© North Carolina State University; All Rights Reserved

<u>Example</u>: Consider H_2-based scramjet flying @ $M=11$; 40 km alt; Determine specific thrust for.

$$\eta_{KE,0} = 0.7$$
$$\eta_b = 0.90$$
$$C_{p,c} = 1.1 \frac{kJ}{kg\,K}$$
$$C_{p,b} = 1.5 \frac{kJ}{kg\,K}$$

$$\tau_b \equiv \frac{h_{t4}}{h_{t3}}$$

$$\frac{\tau}{\dot{m}_a} = V_0 \left[\left\{ \eta_{KE,0} (1+f) \left(1 + \frac{\eta_b f H_{vf}}{C_{p_c} T_{t0}} \right) \right\}^{1/2} - 1 \right]$$

For Stoic. H_2; $f = 0.029$

$C_{p_c} = 1.1$ kJ/kg K.

$V_0 = M_0 \sqrt{\gamma R T_0}$; $T_0 \approx 250K$

$$\frac{\tau}{\dot{m}_a} = 131 \frac{N\text{-}s}{kg}$$

If we had defined $\tau_b \equiv \frac{T_{t4}}{T_{t3}}$ (assumes $C_p \equiv \phi$) $\Rightarrow \frac{\tau}{\dot{m}_a} = -434 \frac{N\cdot s}{kg}$

Used $\vec{C_p}$ values

© North Carolina State University, All Rights Reserved

Turbo ramjet, @ static cond^{n}s, ram pressure is 0. Does not become appreciable until low supersonic speeds, $M \approx 2.5$. At that Mach #, ram compression is sufficient & does not need mech compressor (or turbines)

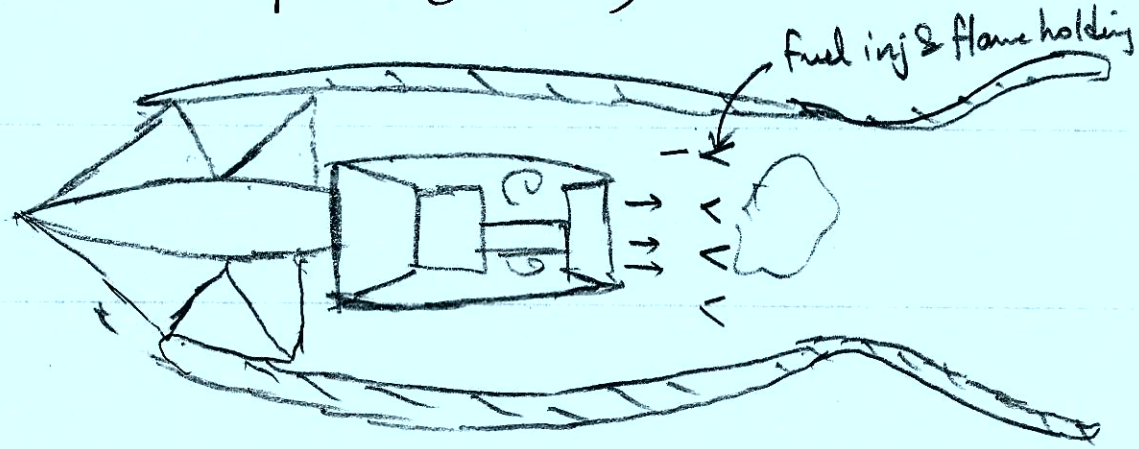

- @ Take off, valves are all the way closed for ram & all air goes into turbojet & the turboramjet (TRJ) acts like turbojet w/ AB.

- As M_0 increases, valves start to open into ram & some air gets diverted around the core, call this $\dot{m}_r$ ($\dot{m}_c$ = turbojet core flow). Can define

$$BPR\Big)_{TRJ} = \frac{\dot{m}_r}{\dot{m}_c}$$

Want BPR to increase w/ Mach #; $0 \leq BPR \leq \infty$

© North Carolina State University, All Rights Reserved